2+2H
Exterior

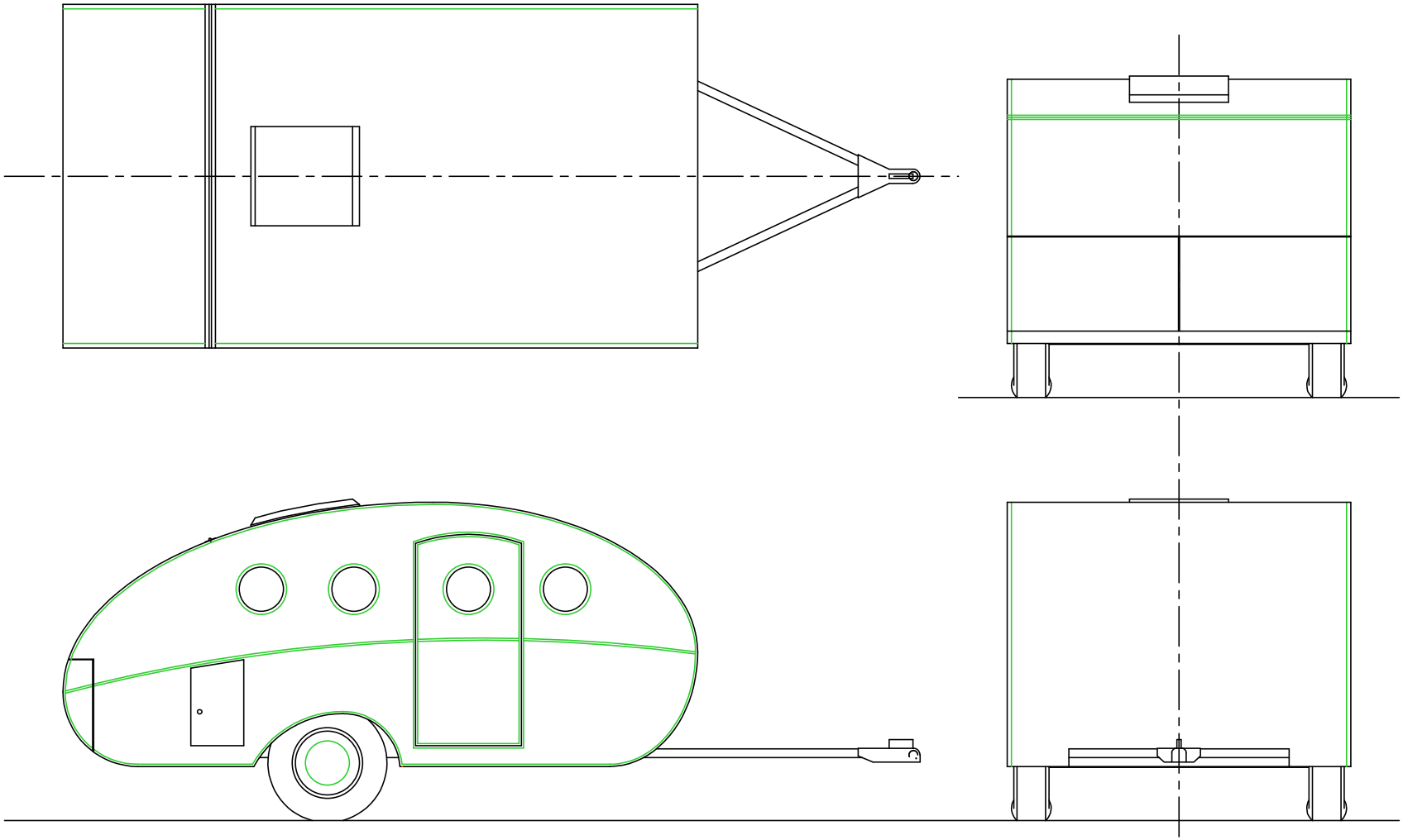

2+2H
Interior 1

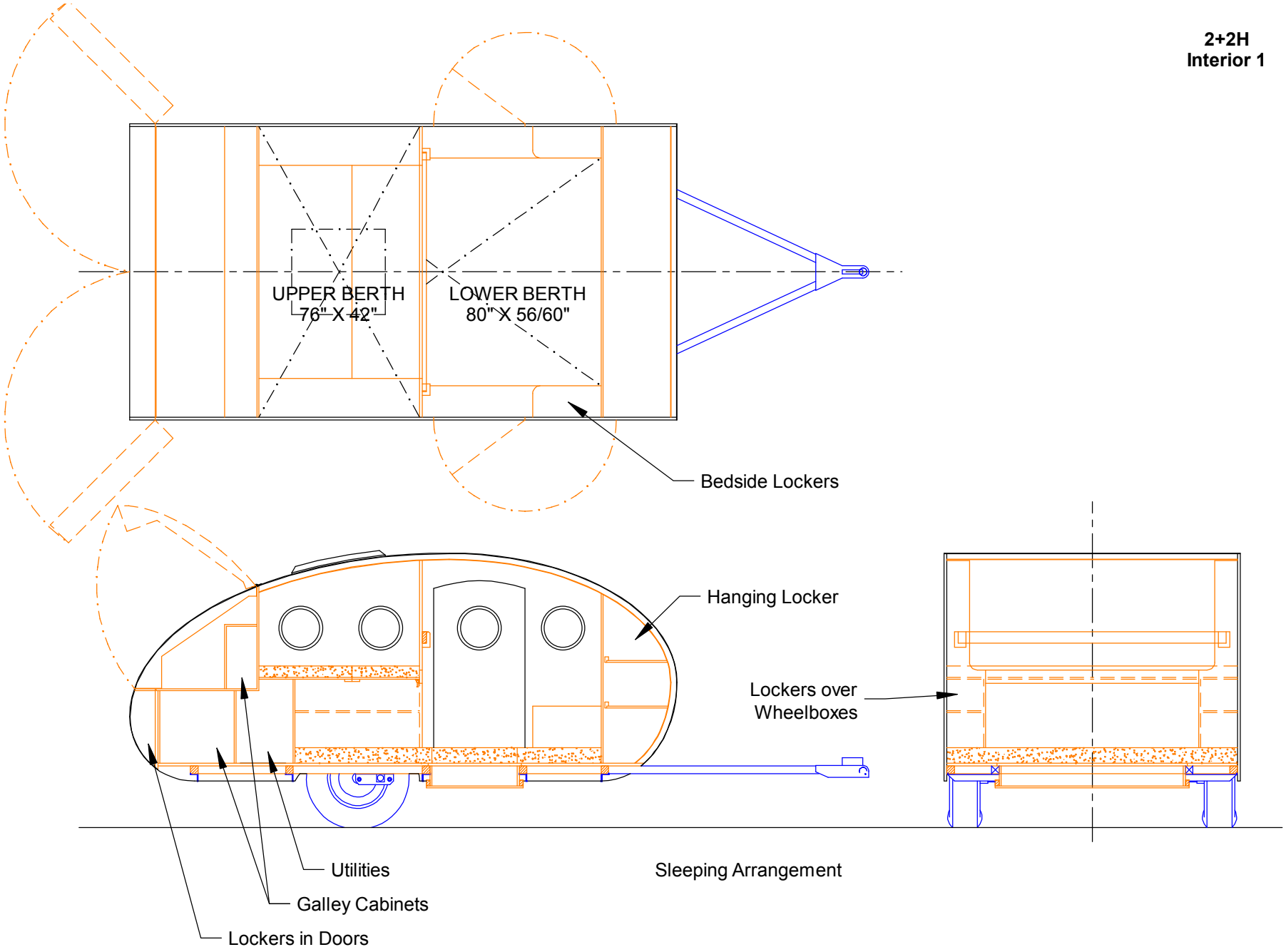

Sleeping Arrangement

2+2H
Interior 2

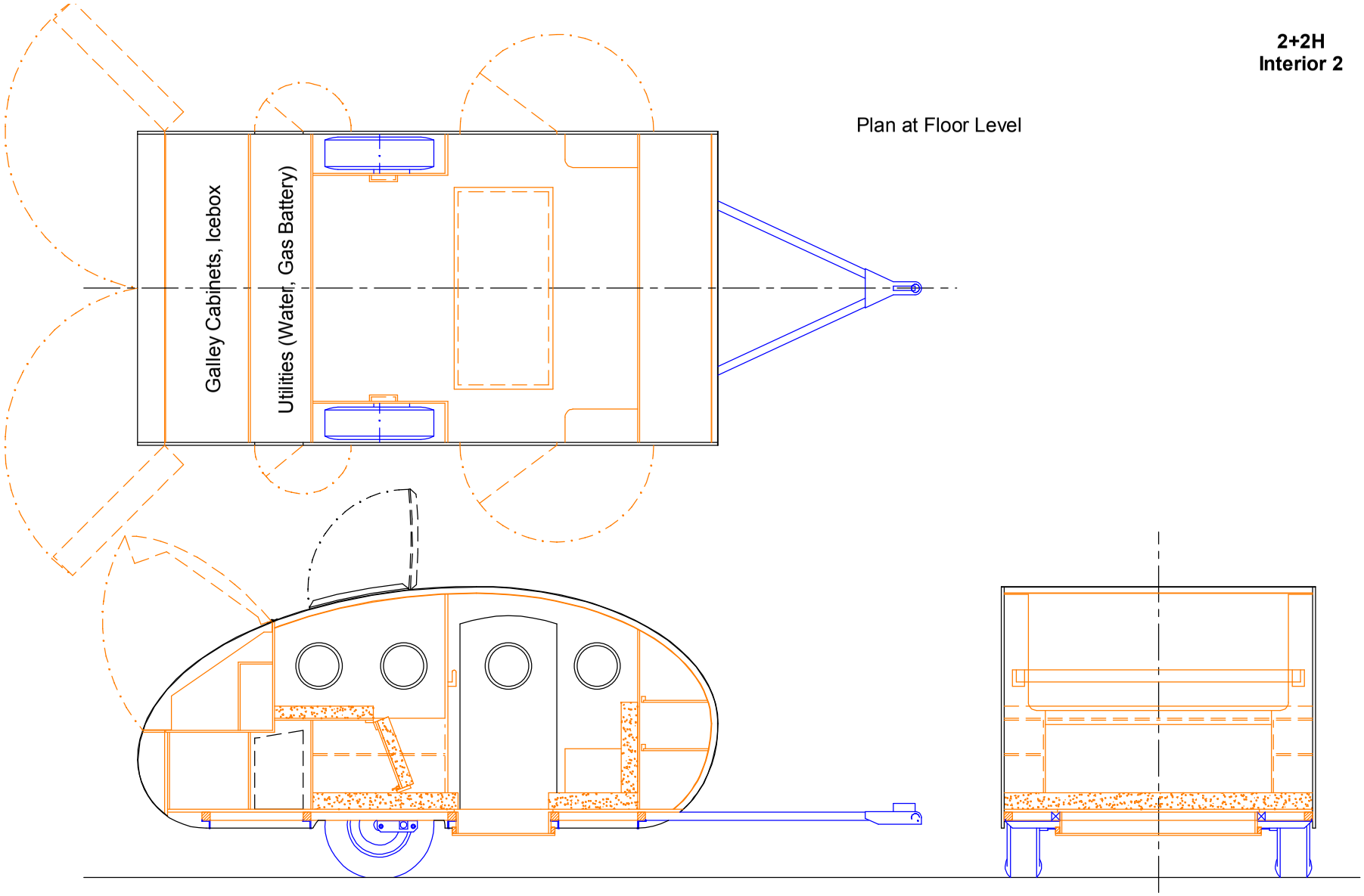

2+2H
Geometry 1

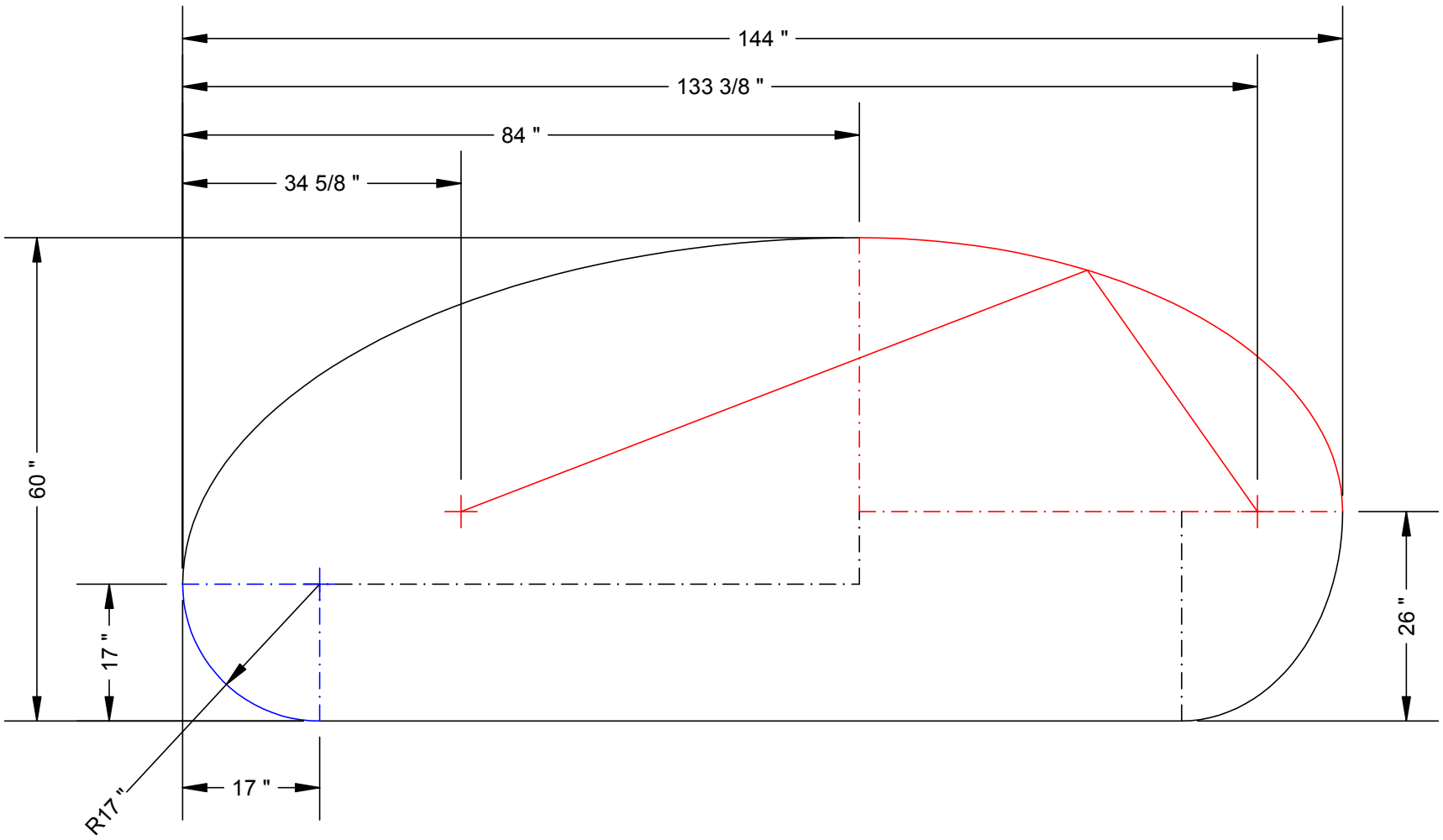

2+2H
Geometry 2

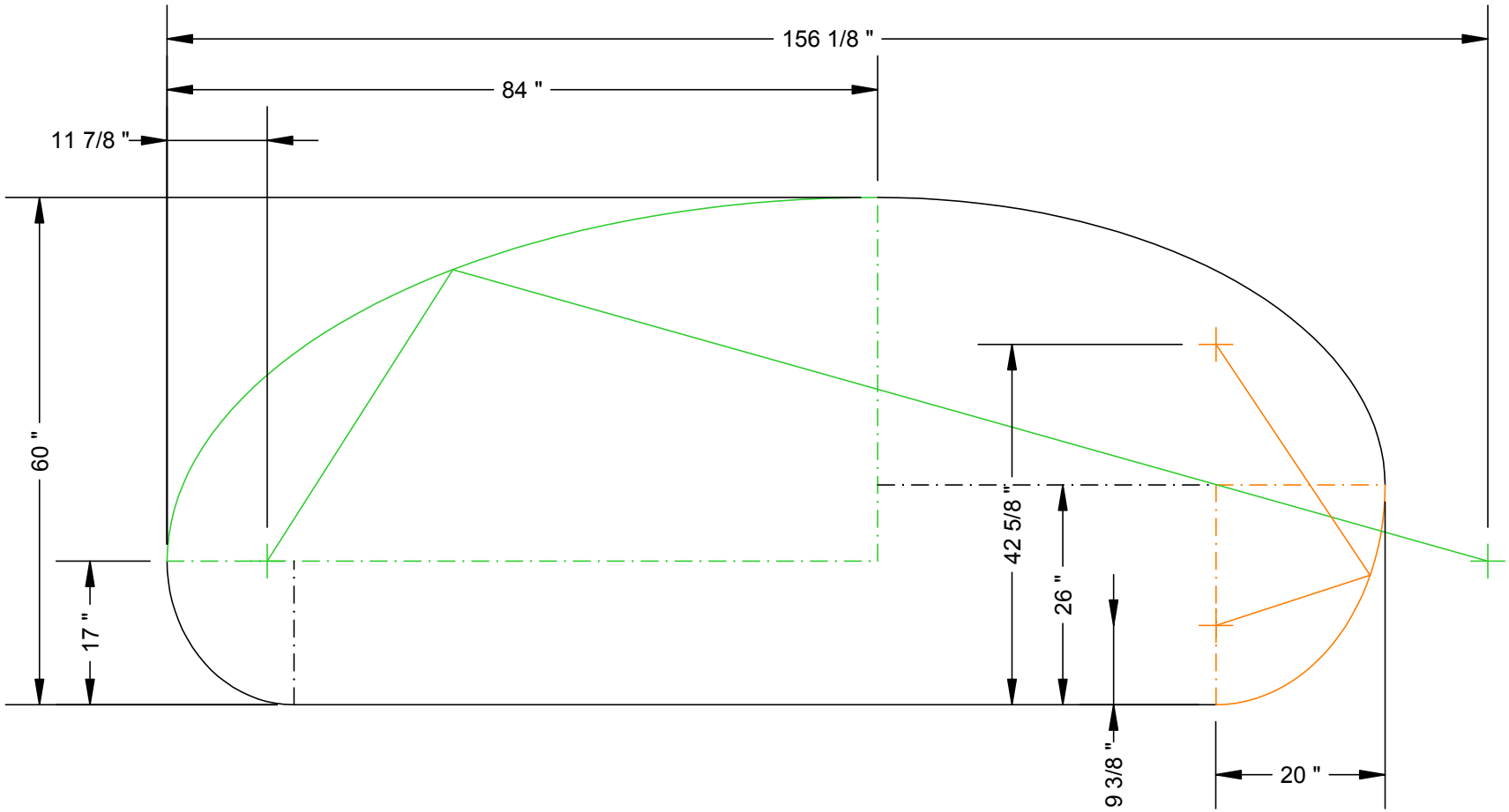

2+2H
Geometry 3

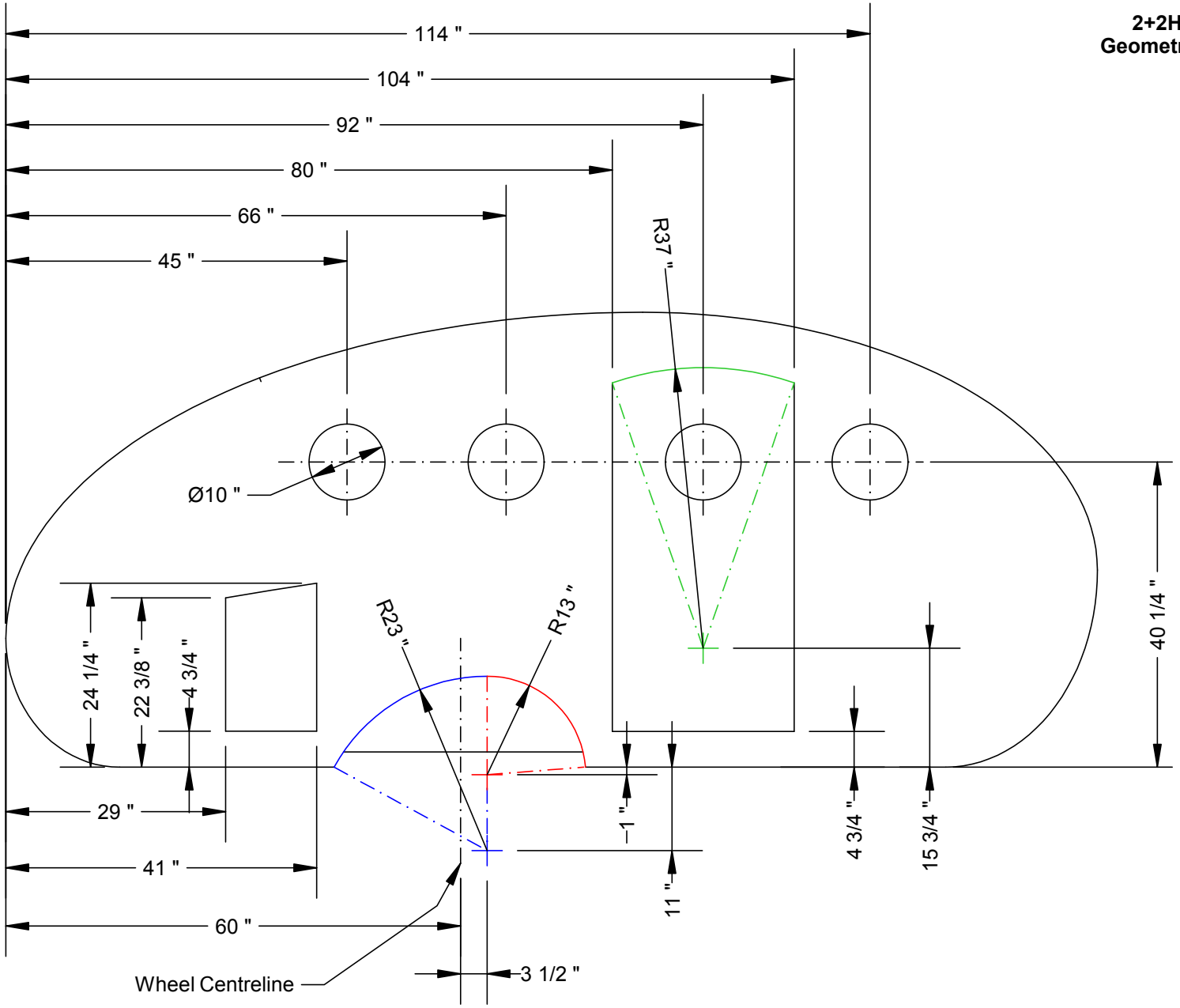

2+2H
Chassis

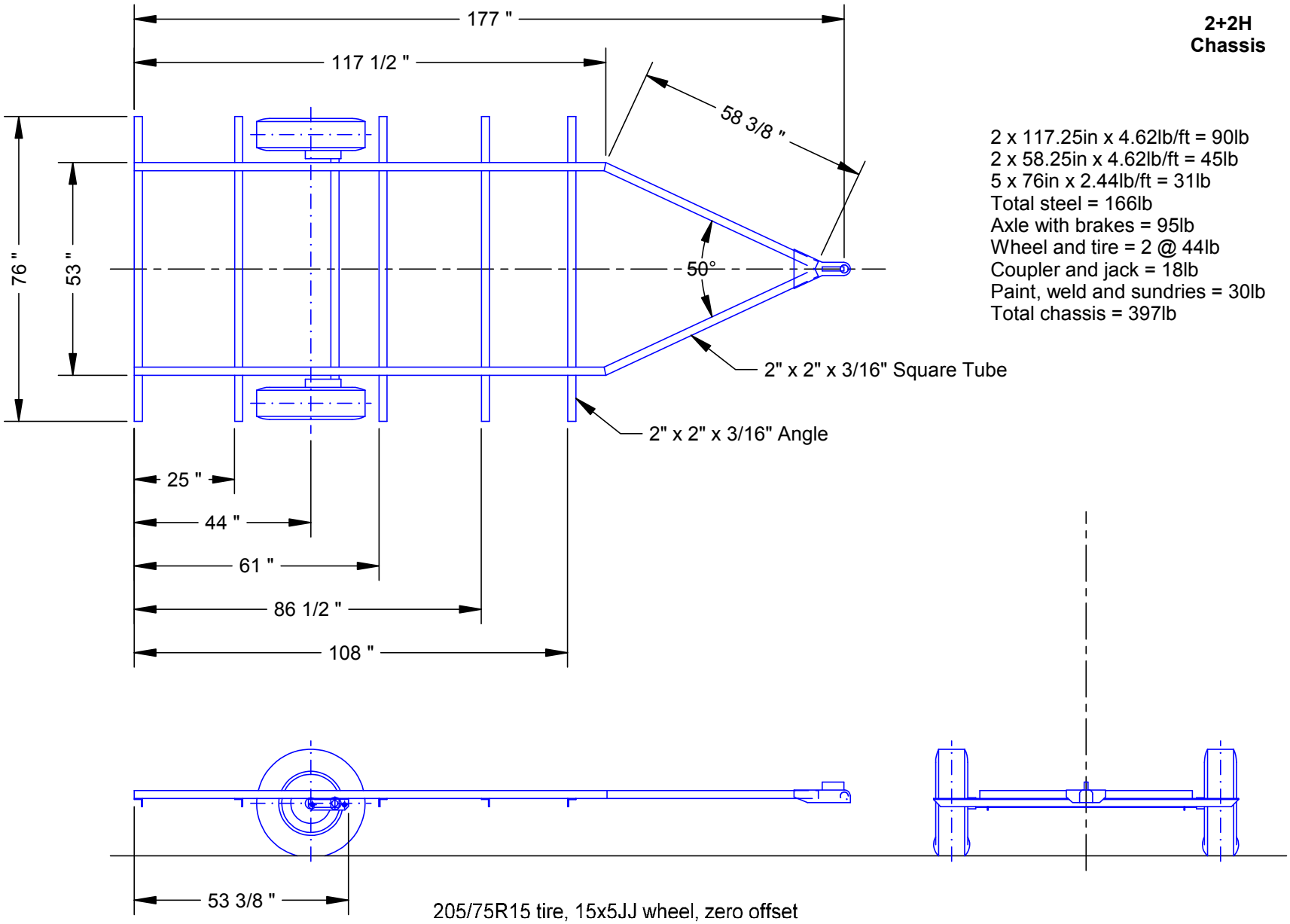

2 x 117.25in x 4.62lb/ft = 90lb
2 x 58.25in x 4.62lb/ft = 45lb
5 x 76in x 2.44lb/ft = 31lb
Total steel = 166lb
Axle with brakes = 95lb
Wheel and tire = 2 @ 44lb
Coupler and jack = 18lb
Paint, weld and sundries = 30lb
Total chassis = 397lb

205/75R15 tire, 15x5JJ wheel, zero offset
Dexter #9 axle with brakes, 22.5 deg down start angle
67" hubface, 7" overhang, 53" outside brackets

2+2H
Geometry 4

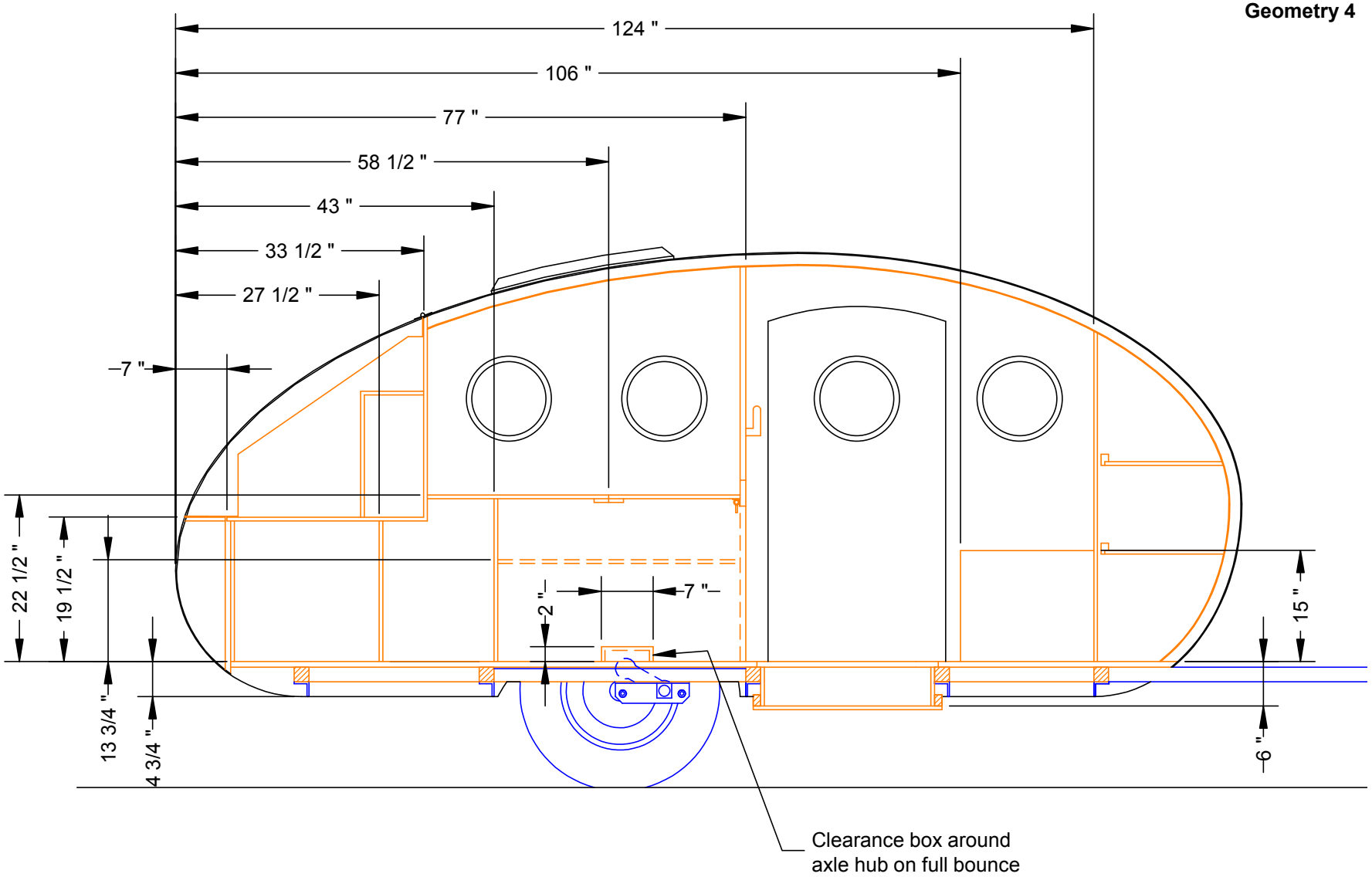

2+2H
Geometry 5

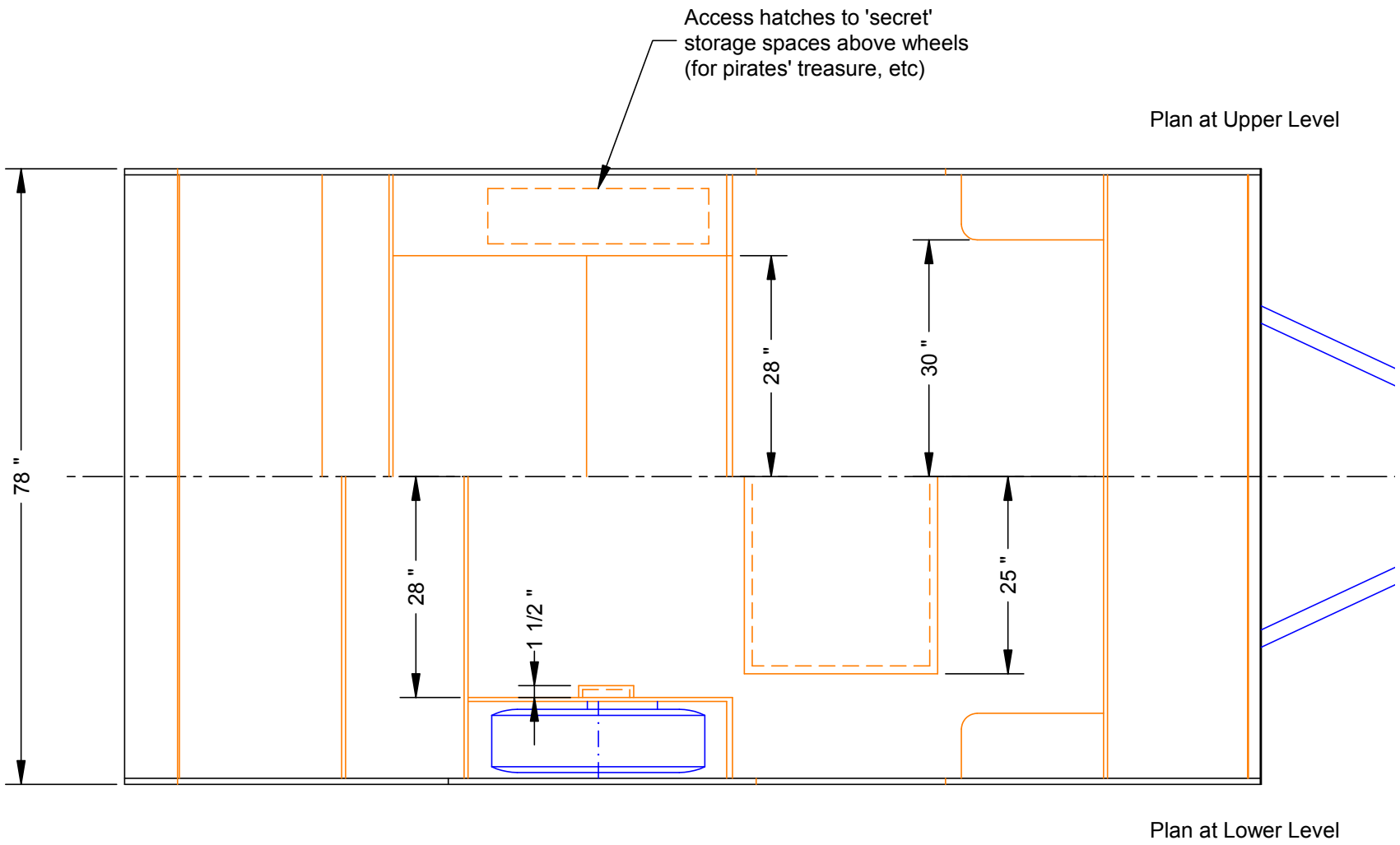

2+2H
Structure 1

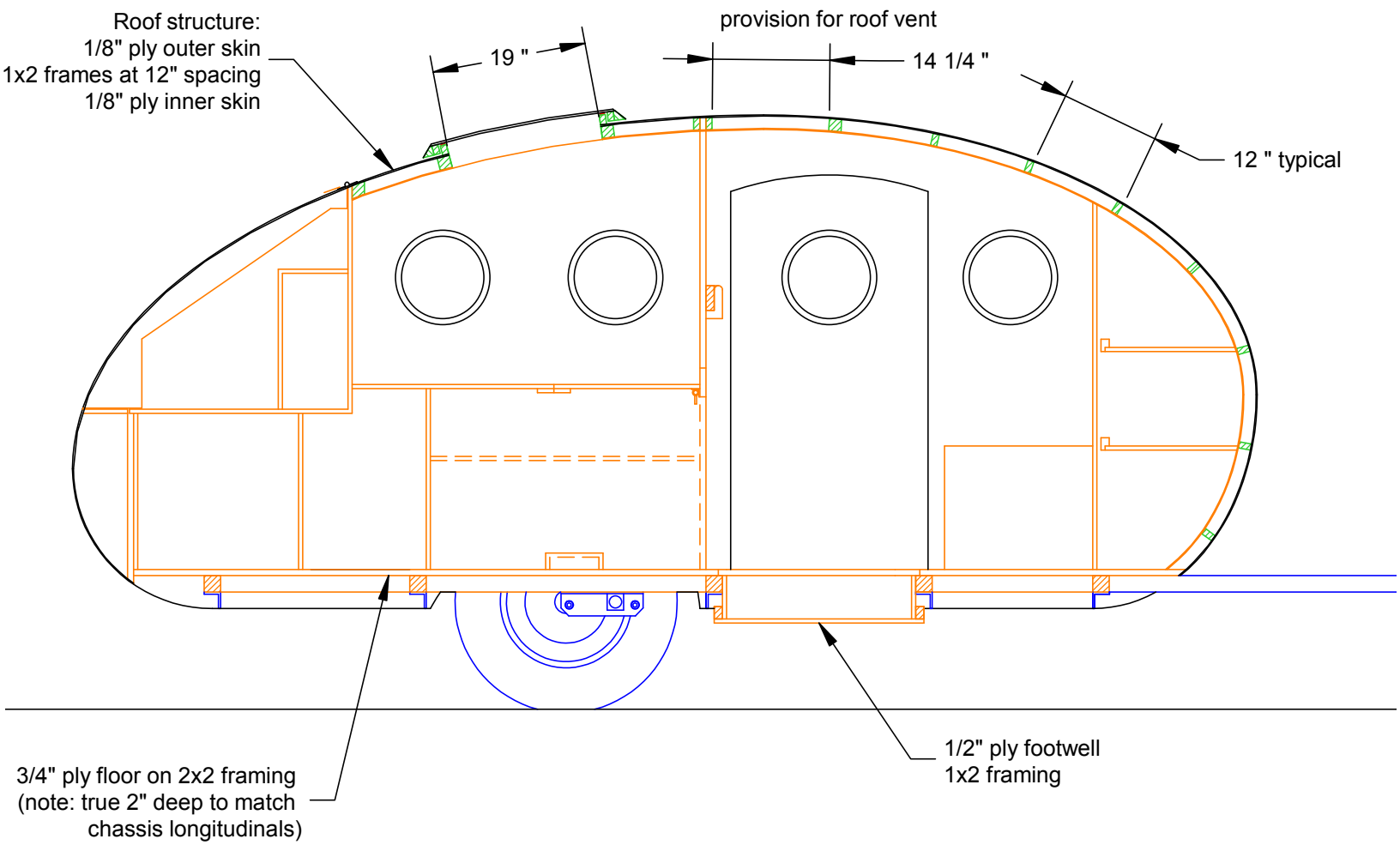

2+2H
Structure 2

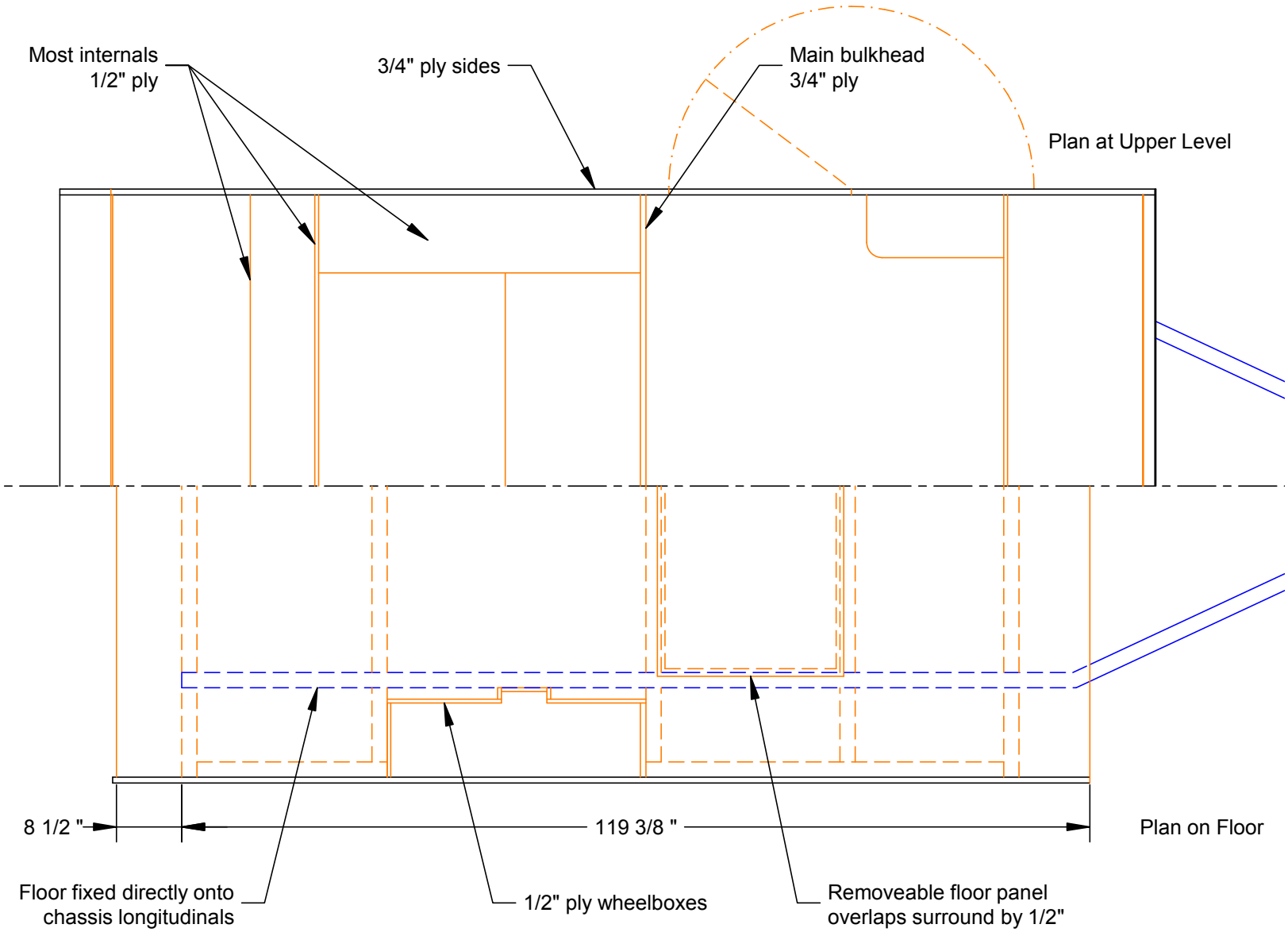
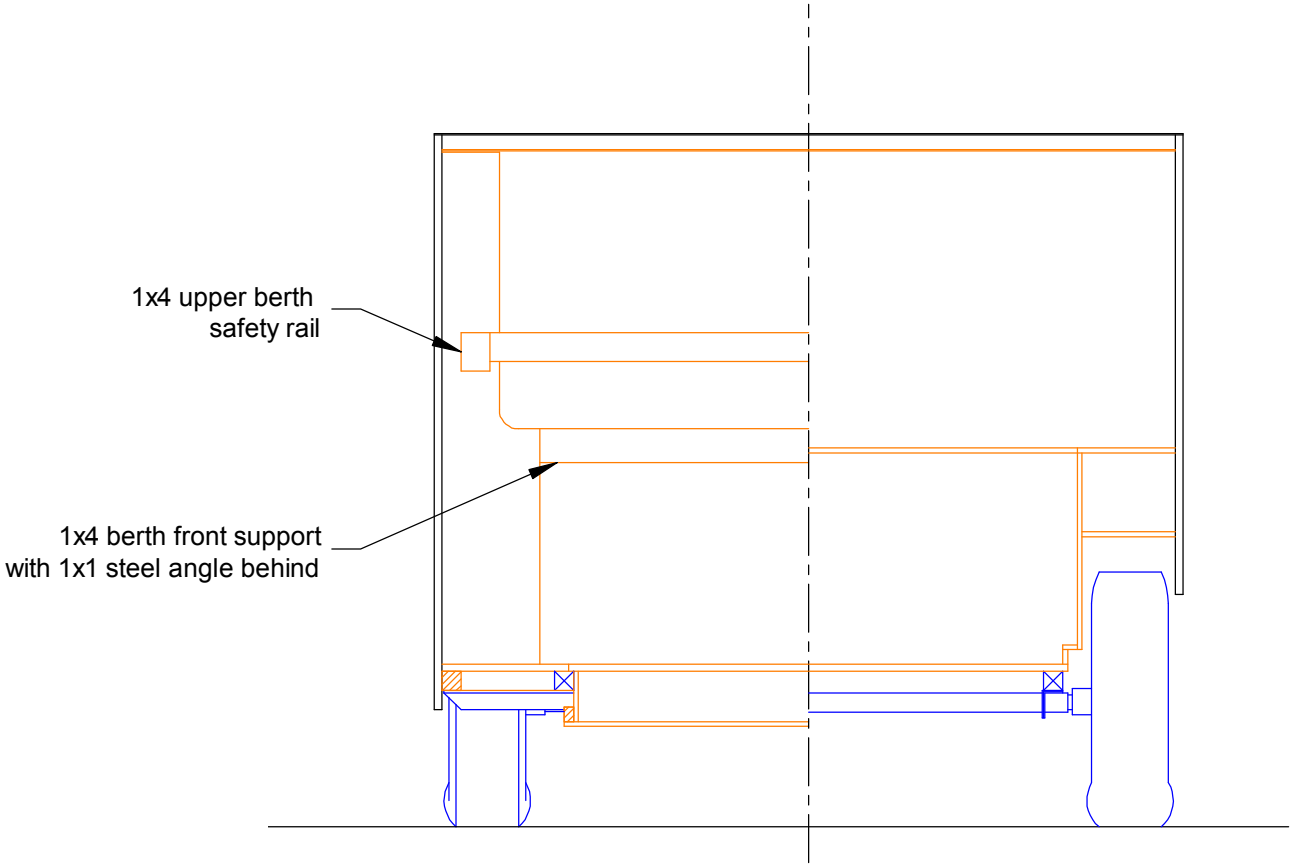
2+2H
Structure 3